Top Studio
Detail Master

1/20F2003-GA

SUPER DETAIL-UP SET

www.topstudiohobby.com

FOR FUJIMI

MD29013

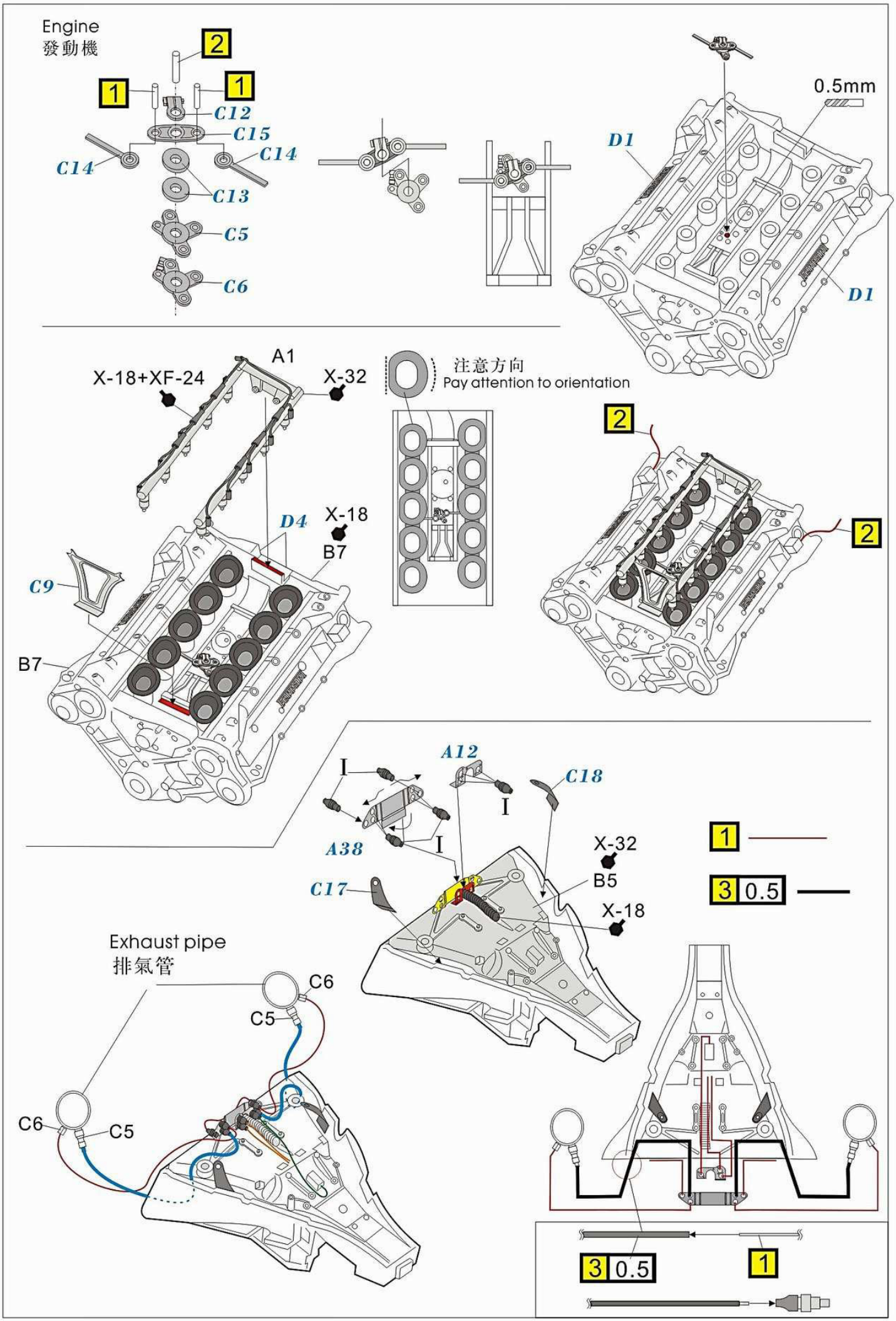
Engine
發動機
2
1
1
C12
C15
C14
C14
C13
C5
C6
0.5mm
D1
D1
A1
X-18+XF-24
X-32
注意方向
Pay attention to orientation
2
2
D4
X-18
B7
C9
B7
A12
I
C18
I
A38
I
X-32
B5
C17
X-18
1
3 0.5
Exhaust pipe
排氣管
C6
C5
C6
C5
3 0.5
1

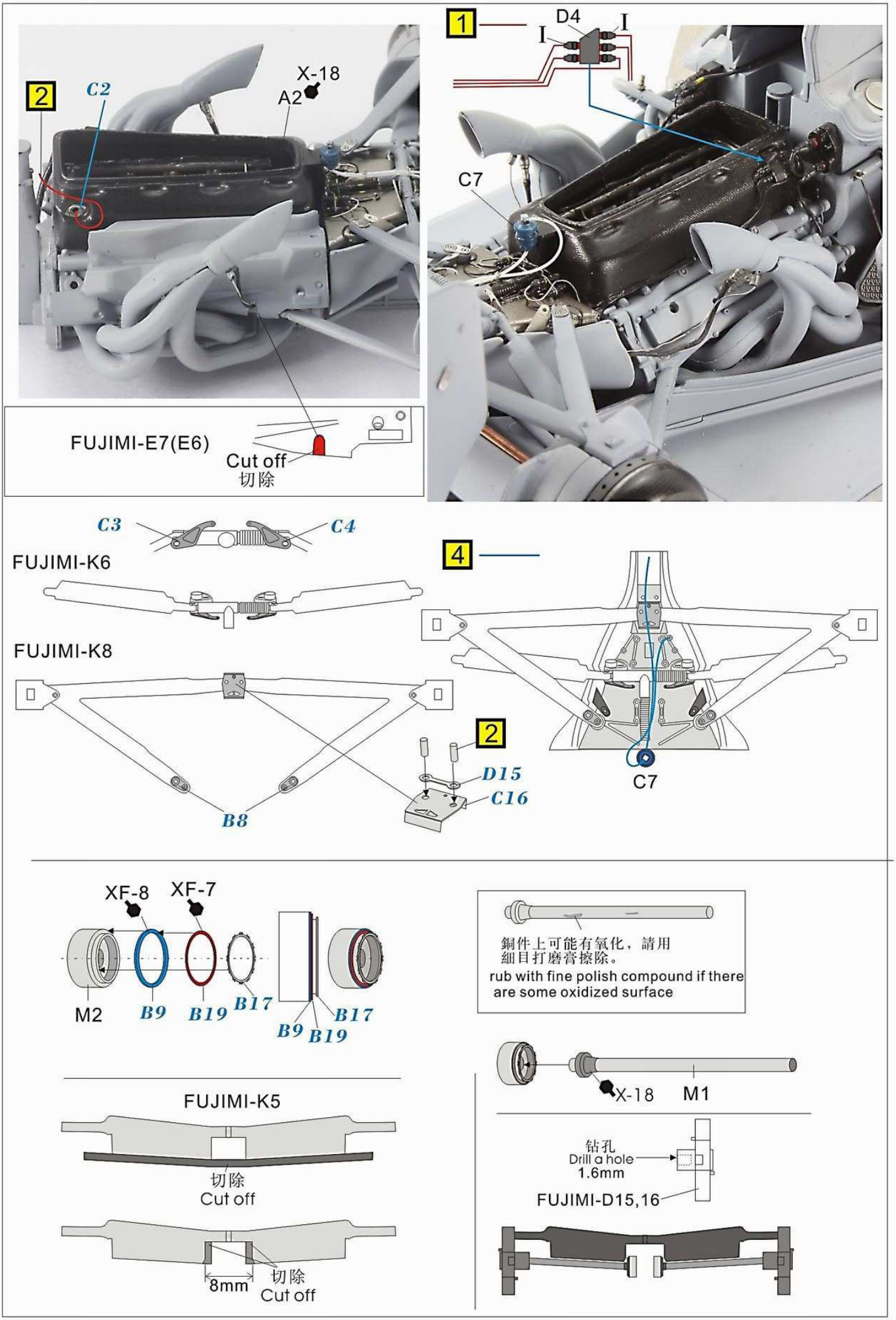
1
D4
I
I
C7
2
C2
X-18
A2
FUJIMI-E7(E6)
Cut off
切除
C3
C4
FUJIMI-K6
FUJIMI-K8
B8
4
C7
2
D15
C16
XF-8
XF-7
M2
B9
B19
B17
B9
B19
B17
銅件上可能有氧化，請用
細目打磨膏擦除。
rub with fine polish compound if there
are some oxidized surface
FUJIMI-K5
切除
Cut off
8mm
切除
Cut off
X-18
M1
钻孔
Drill a hole
1.6mm
FUJIMI-D15,16

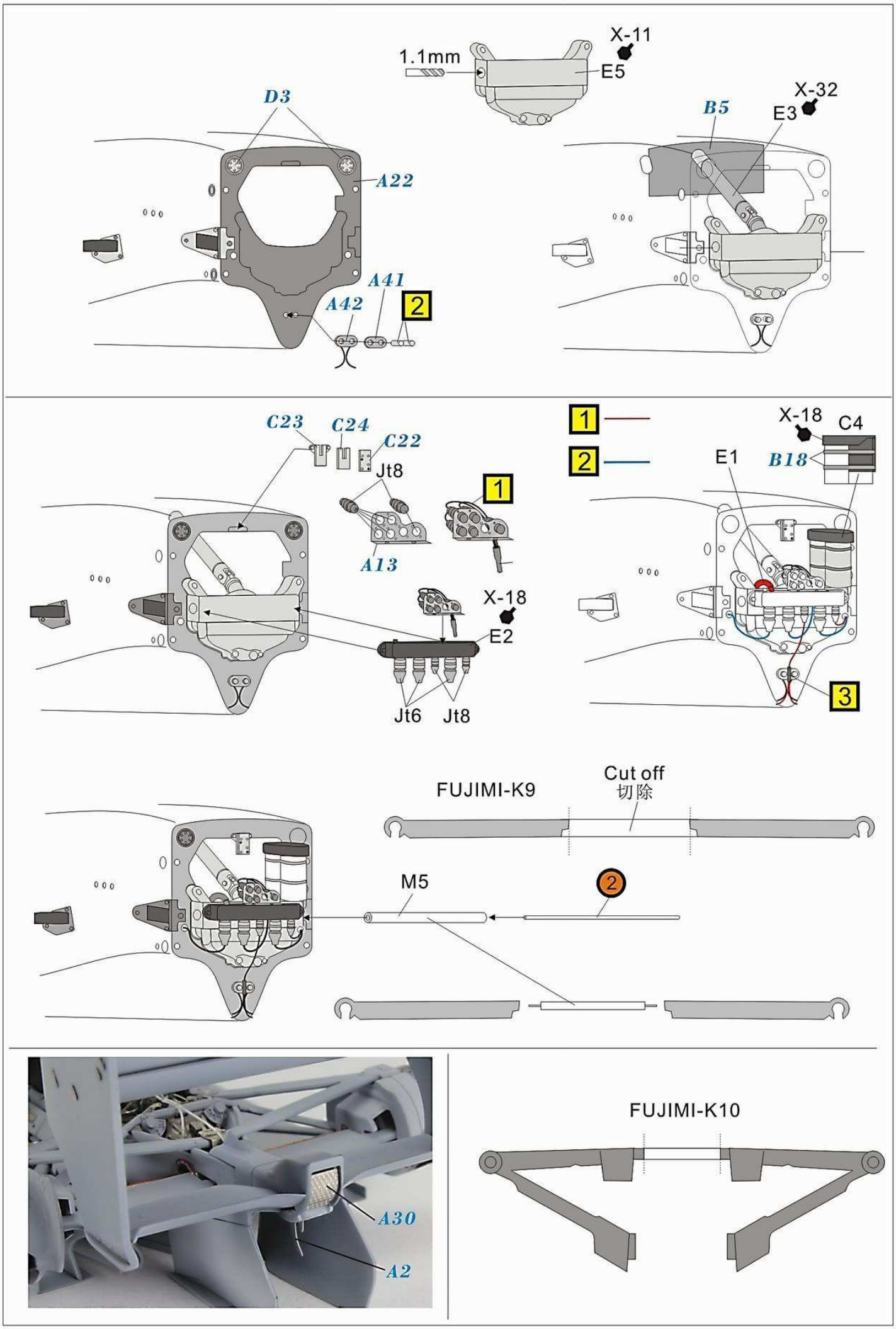
1.1mm
X-11
E5
D3
A22
A41
A42
2
B5
X-32
E3
C23
C24
C22
Jt8
1
A13
X-18
E2
Jt6
Jt8
1
2
X-18
C4
E1
B18
3
FUJIMI-K9
Cut off
切除
M5
2
A30
A2
FUJIMI-K10

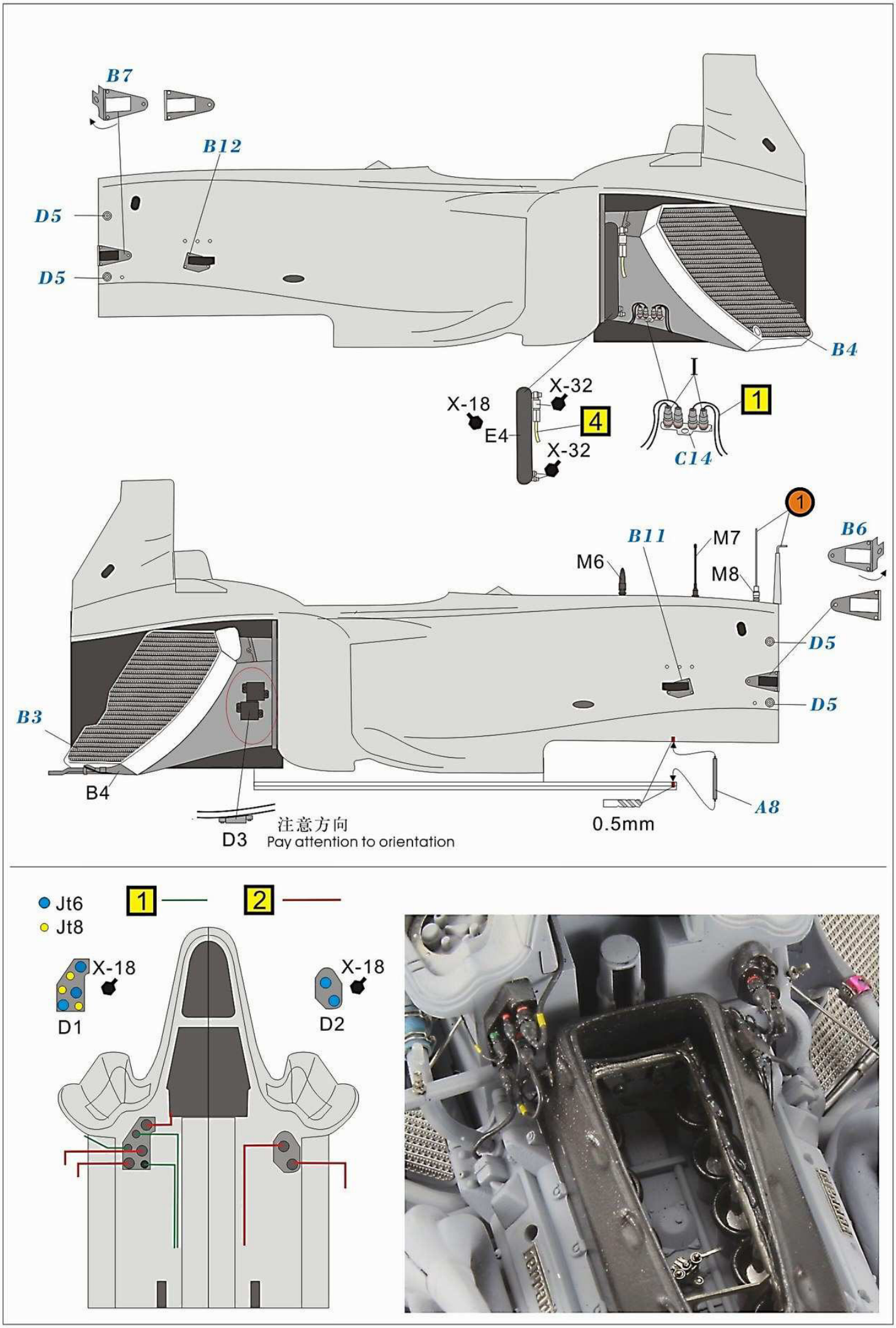
B7
B12
D5
D5
B4
I
X-32
X-18
E4
4
X-32
1
C14
1
B11
M7
M6
M8
B6
D5
D5
B3
B4
A8
0.5mm
D3
注意方向
Pay attention to orientation
Jt6
Jt8
1
2
X-18
D1
X-18
D2

Radiator
散熱器

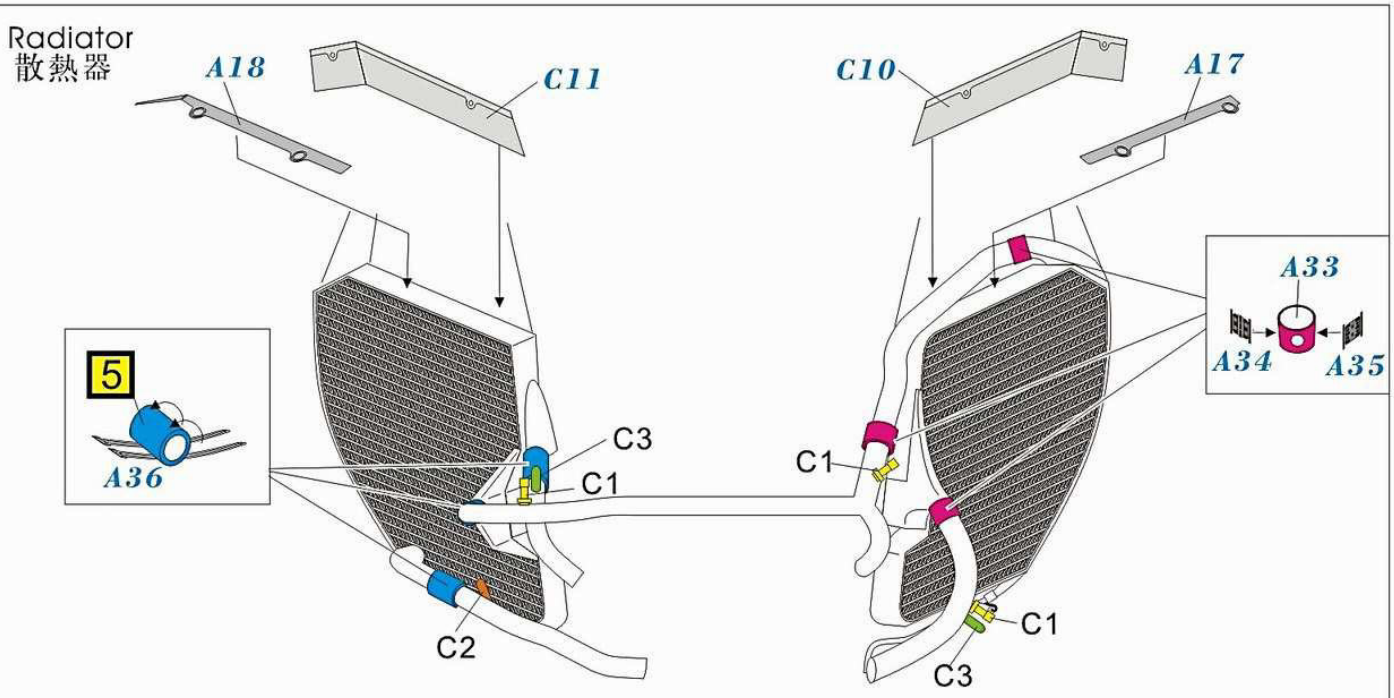

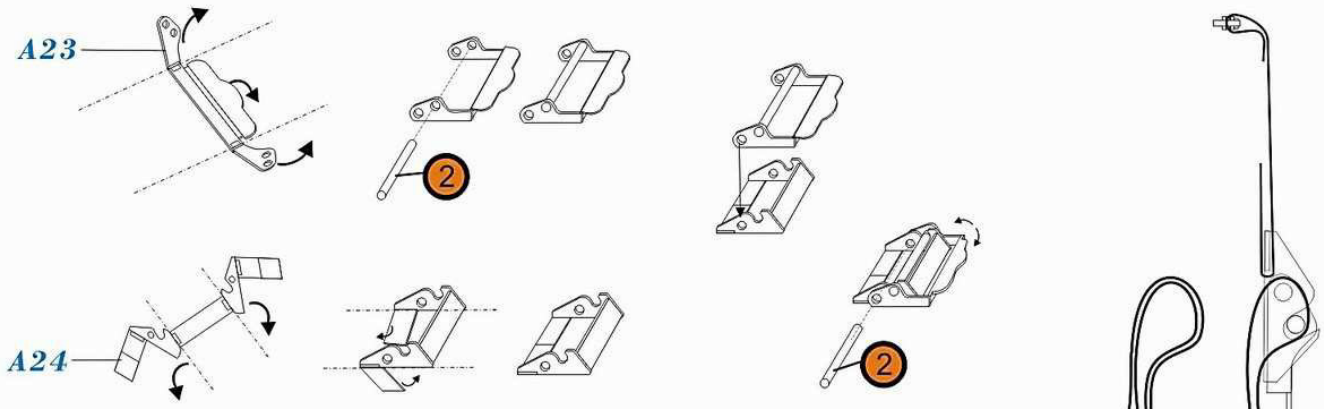

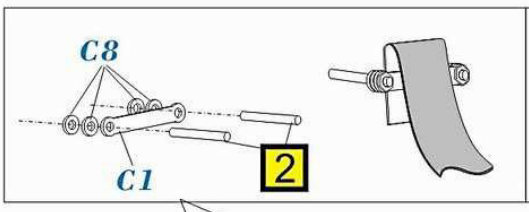

安全帶制作：
Seat belt making:
將安全帶布用鋒利的筆刀裁成布條使用。
cut the seat belt material into a stripe by a sharp hobby knife

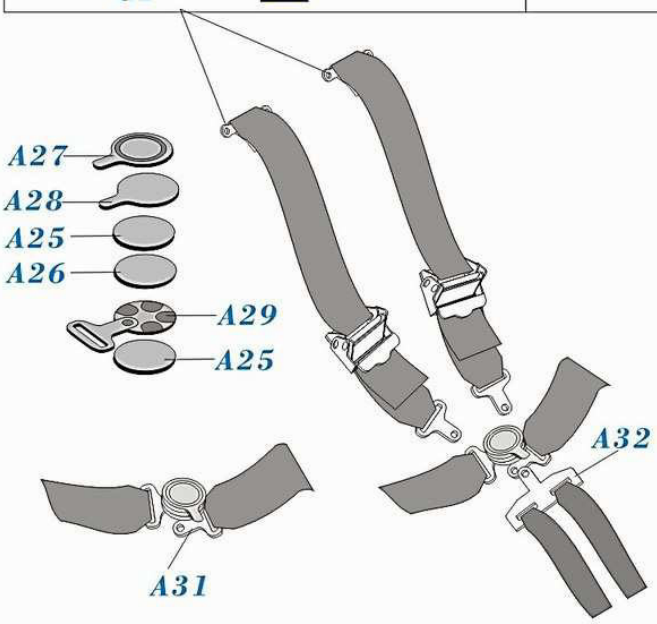

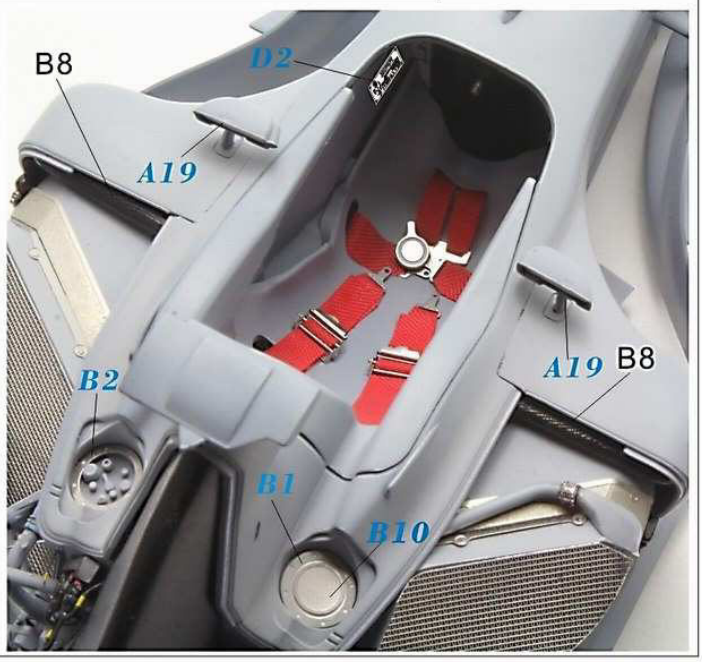

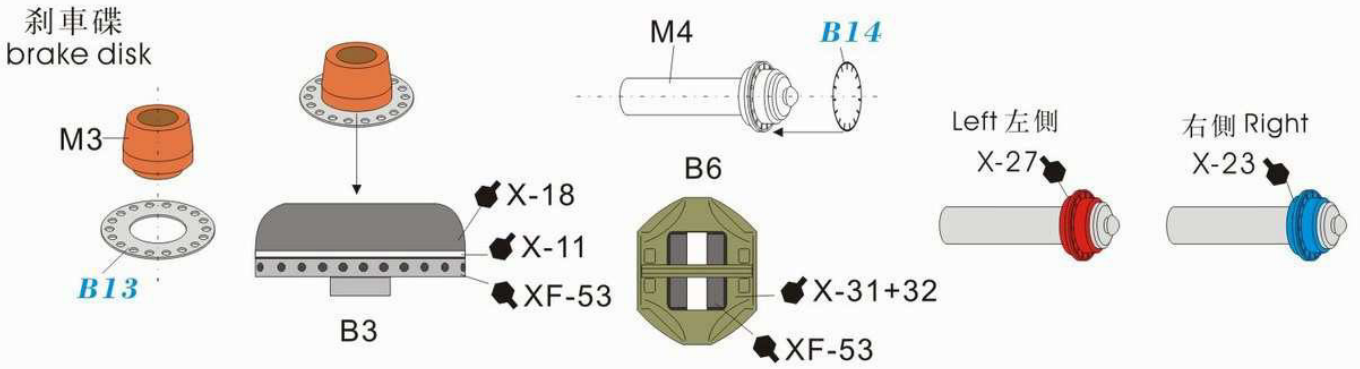
刹車碟
brake disk
M3
B13
X-18
X-11
XF-53
B3
M4
B14
B6
X-31+32
XF-53
Left 左側
X-27
右側 Right
X-23

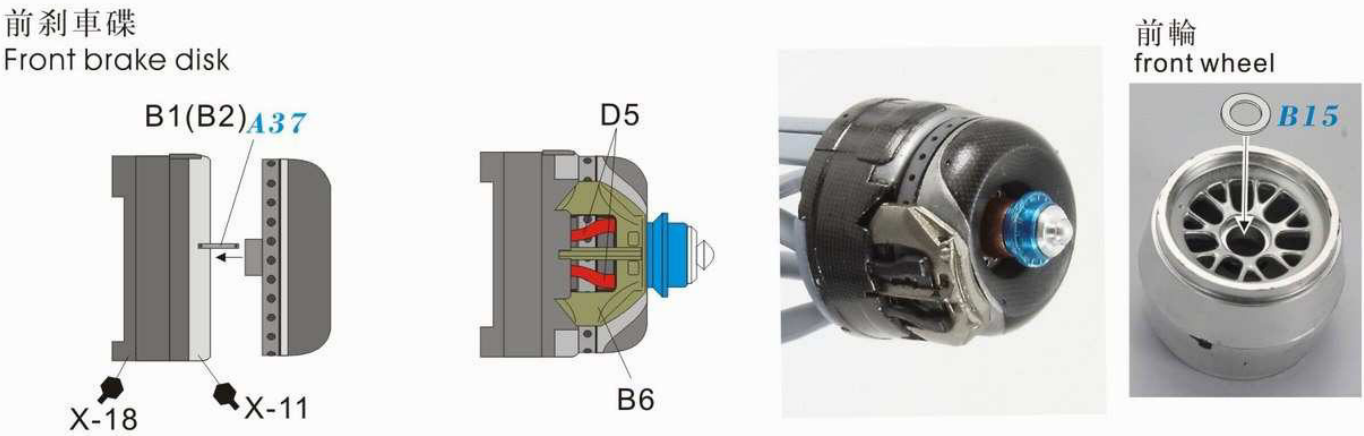
前刹車碟
Front brake disk
B1(B2)
A37
X-18
X-11
D5
B6
前輪
front wheel
B15

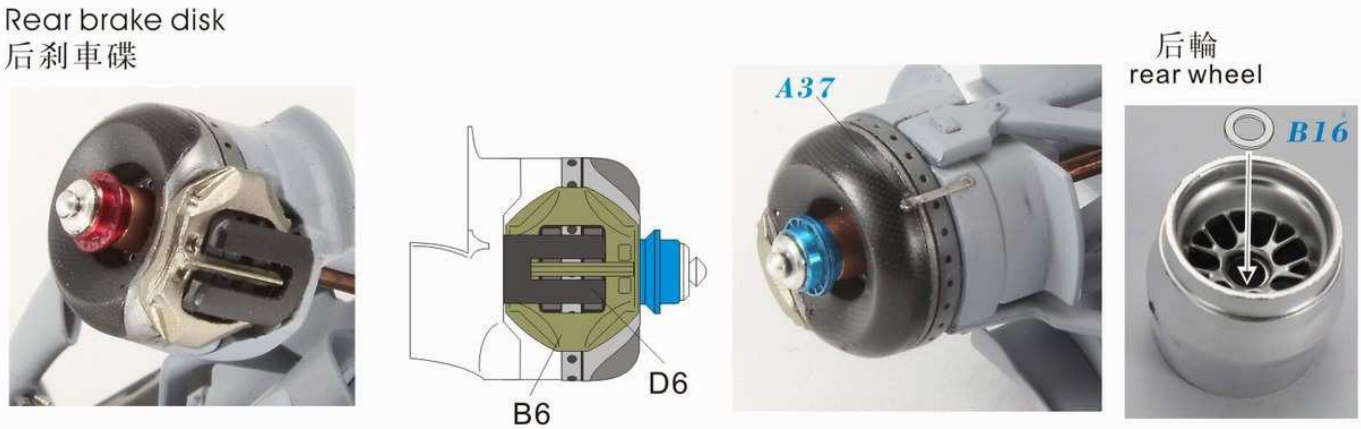
Rear brake disk
后刹車碟
B6
D6
A37
后輪
rear wheel
B16

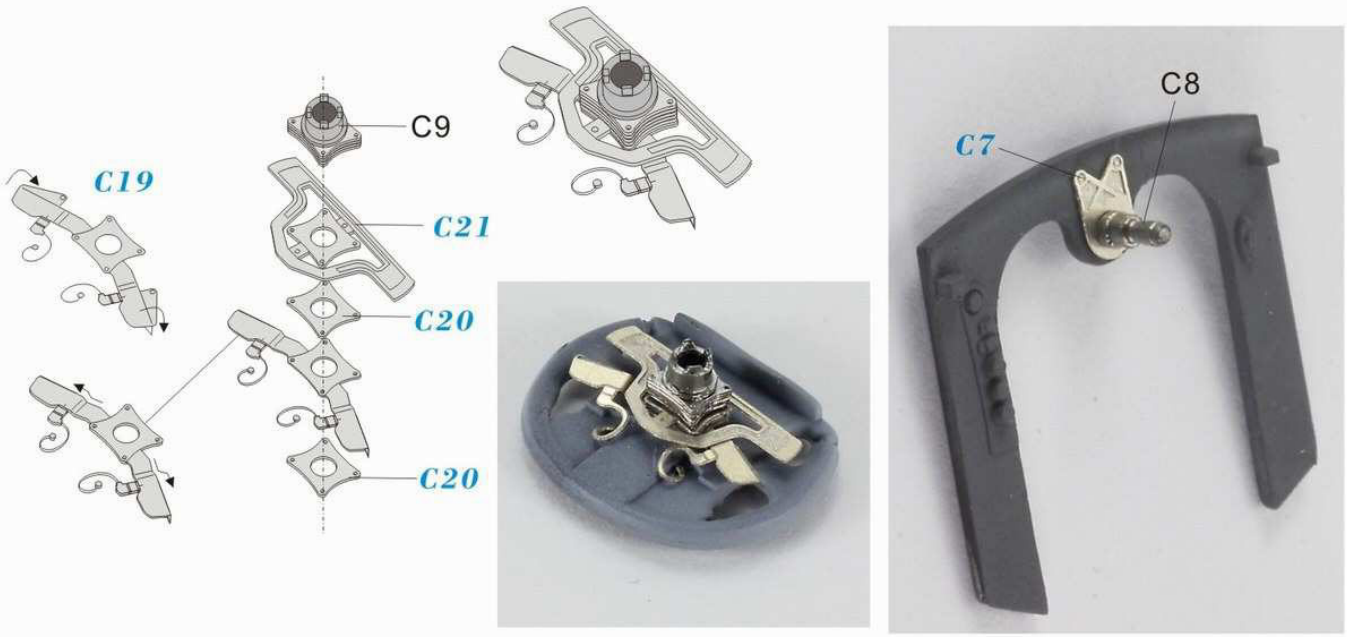
C19
C9
C21
C20
C20
C7
C8

JANAN GP

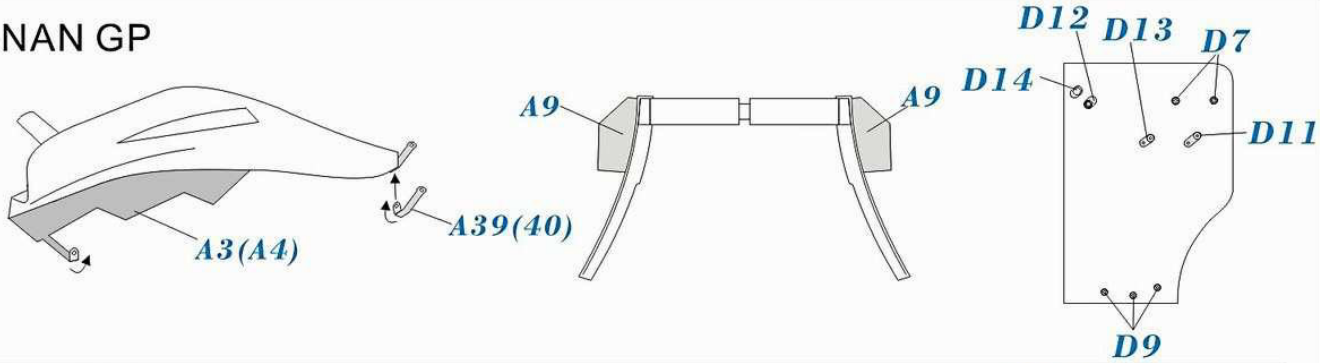

ITALY GP

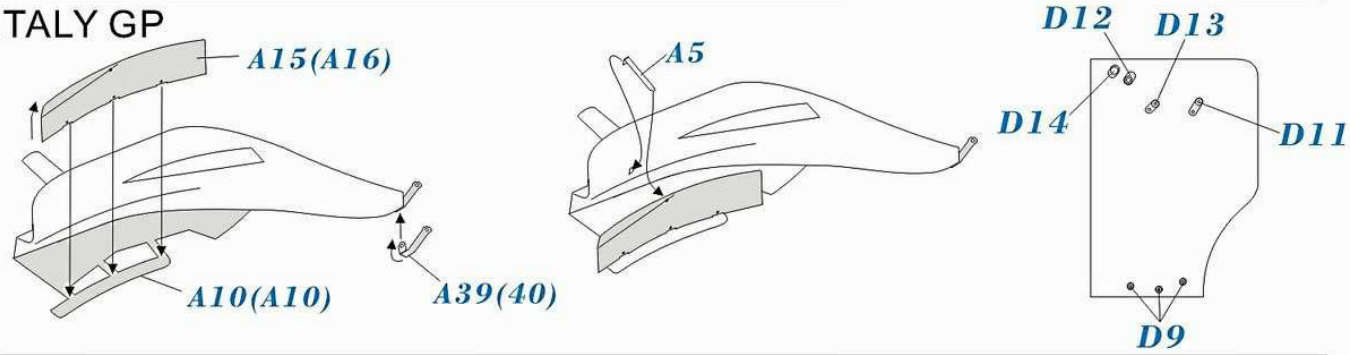

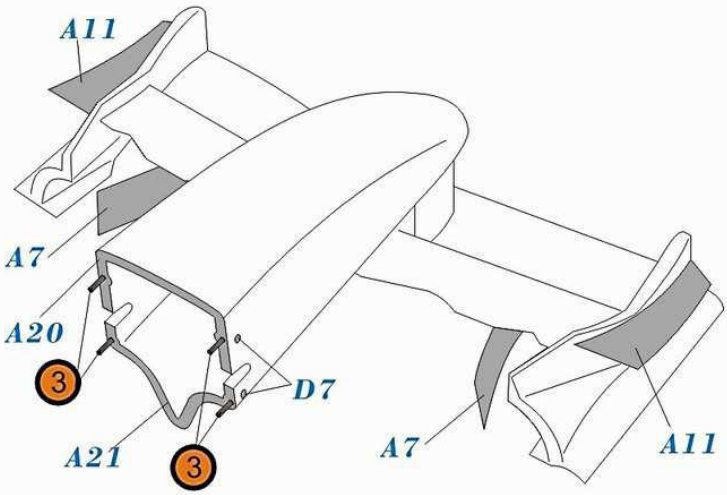

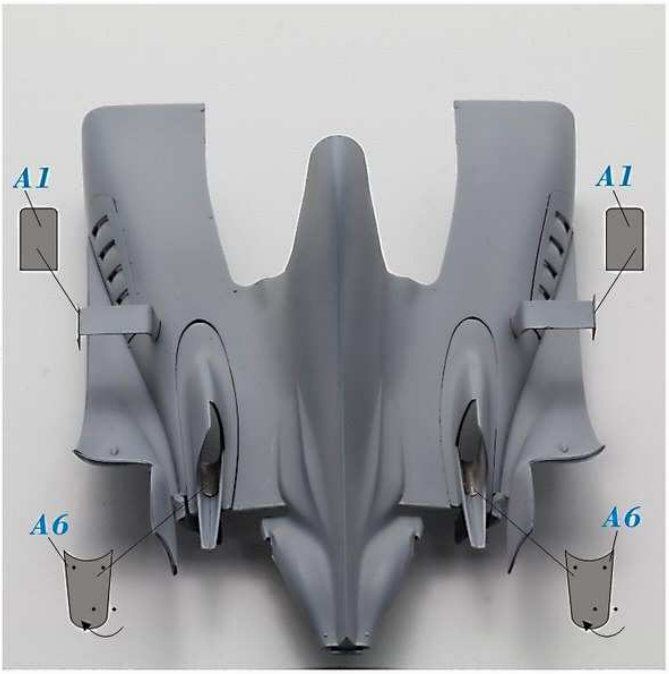

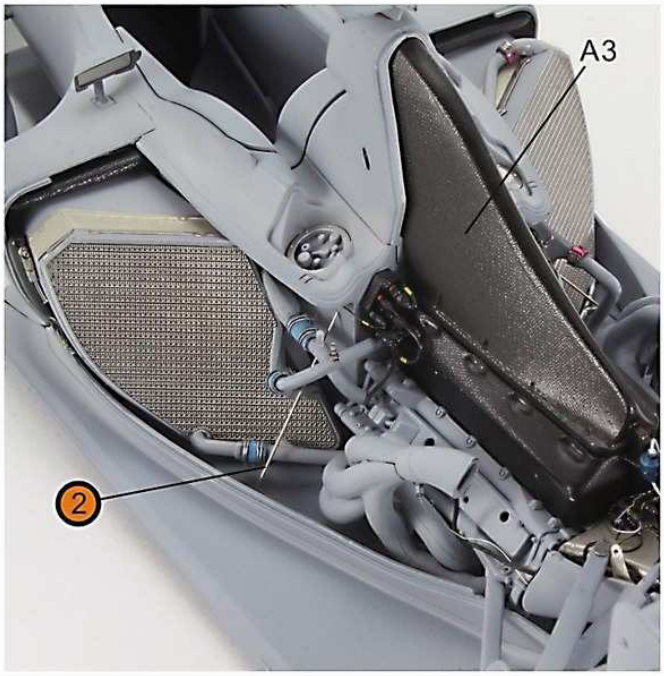

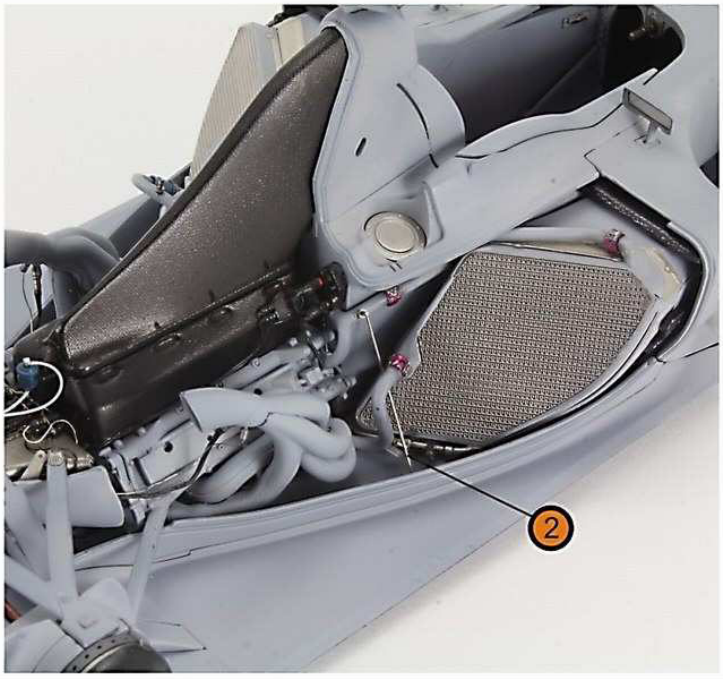

树脂配件Resin parts

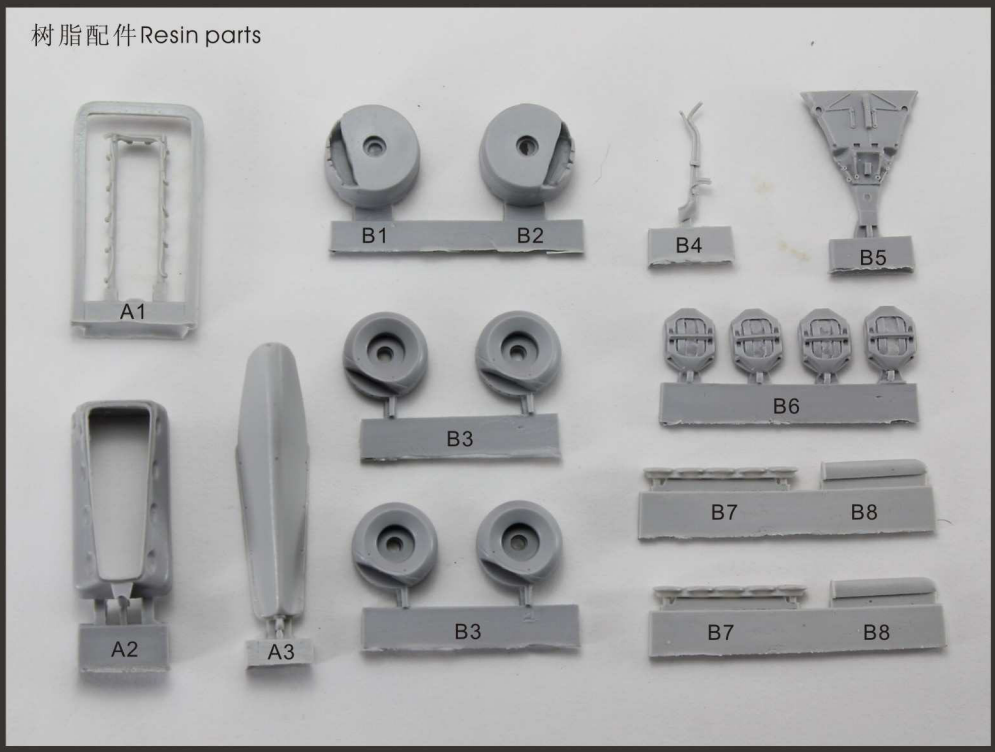

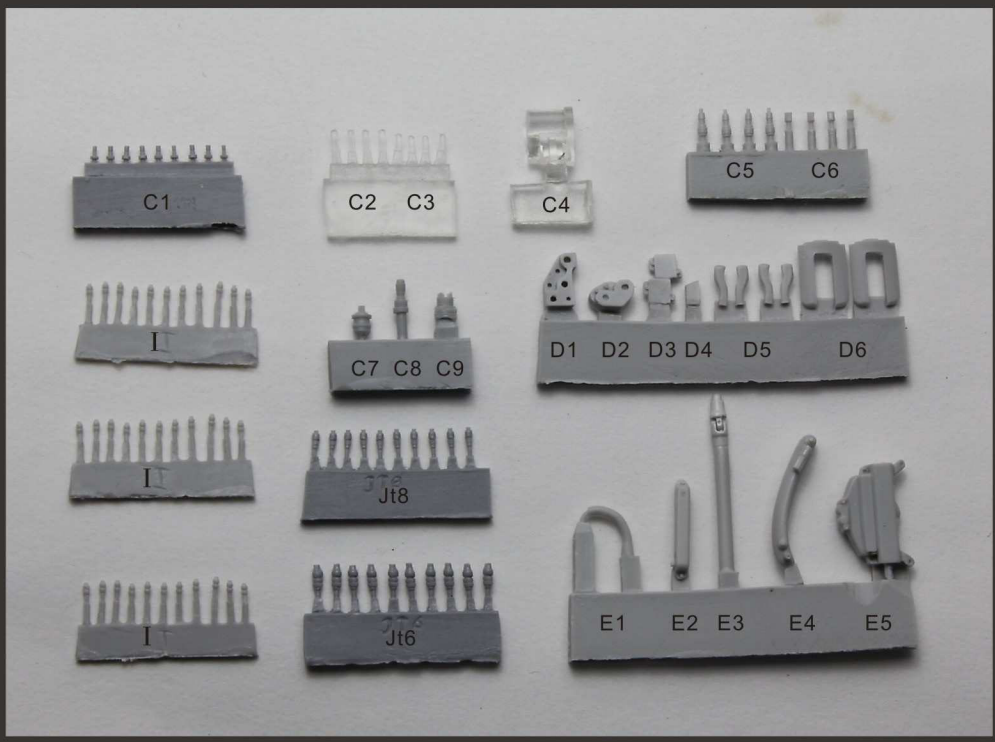

Top Studio Detail Master

1/20F2003-GA

SUPER DETAIL-UP SET

www.topstudiohobby.com

FOR FUJIMI MD29013

金屬部件 Metal parts

M1		× 2
M2		× 2
M3		× 4
M4		× 4
M5		× 1
M6		× 1
M7		× 1
M8		× 1

配綫 Wire

編號 Number	規格 Specification	數量 Quantity
1	0.2mm金屬綫 0.2mm metal wire	×1
2	0.3mm 錫綫 0.3mm solder line	×1
3	黑色熱縮管 Black shrink tube	×2
4	0.3mm 透明膠綫 0.3mm clear wire	×1
5	藍色熱縮管 Blue shrink tube	×1

蝕刻片 Photo-etched plate:A,B,C,D ×1

其他部件 Othet parts

1	0.25mm鋼針 0.25 mm steel wire	×1
2	0.3mm鋼針 0.3mmsteel wire	×1
3	0.5mm銅管 0.5mmbrass pipe	×1

鋁箔貼紙 Metal foil sticker ×2

安全帶布 seat belt material ×1

熱縮管使用：
Using the shrink tube:

1.將熱縮管均勻加熱，加熱後，熱縮管收縮（此時爲收縮的最大直徑）

1. heat the shrink tube evenly, it will be shrunk (the tube now in the largest diameter)

2.待2秒後，將熱縮管拉長，可得到更小的綫徑，拉伸越長，綫徑越小。

2. after 2 seconds, stretch the tube, it will be smaller in diameter when stretch more

圖例： 9 0.6 表示將 熱縮管加工到大約0.6mm：Stretch the shrink tube to about 0.6mm diammeter

接綫參考
connecting the electronic connectors notes

樹脂零件接綫前請鑽孔。

Drill a hole before connecting the wire

Drill a hole 鑽孔 **Wire** 綫

F-13(14): （）内表示對側使用零件編號。

Part in（）is the number for other side

Drill a hole 鑽孔